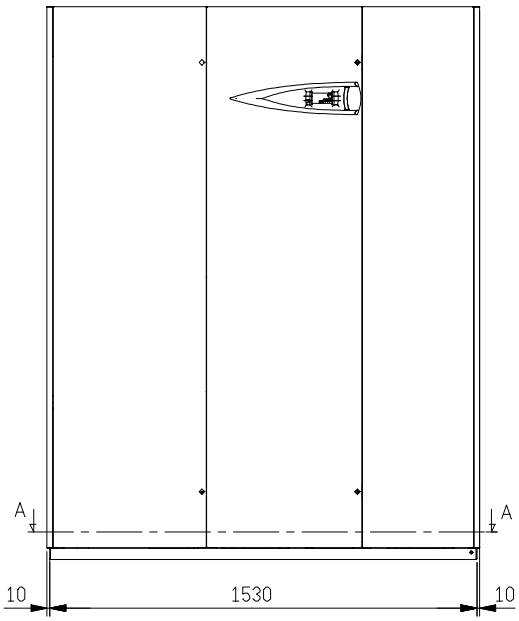

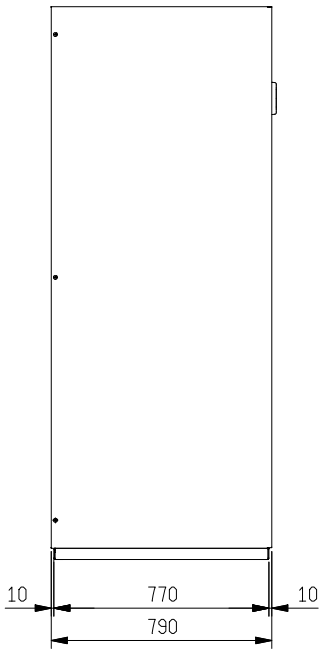

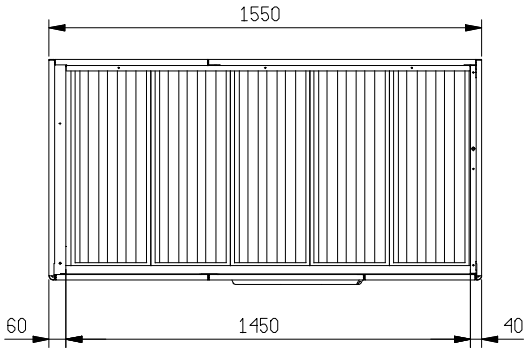

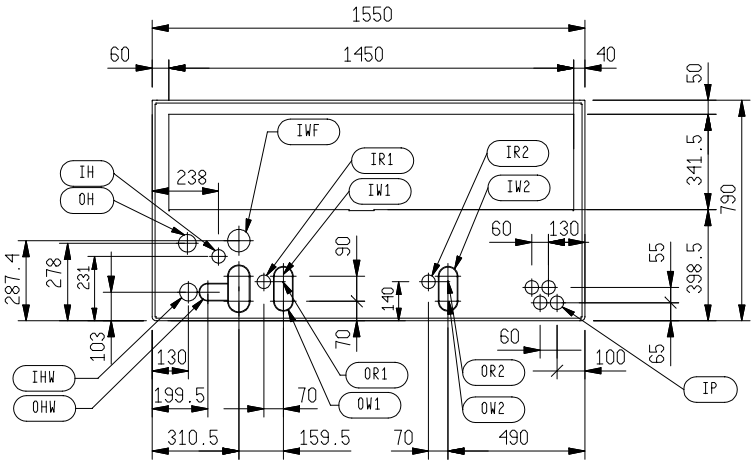

SECTION A-A

ITALIANO	ENGLISH
IR1: IN refrigerante circ.1 AX-AD	IR1: IN refrigerant circ.1 AX-AD
OR1: OUT refrigerante circ.1 AX-AD	OR1: OUT refrigerant circ.1 AX-AD
IR2: IN refrigerante circ.2 AX-AD	IR2: IN refrigerant circ.2 AX-AD
OR2: OUT refrigerante circ.2 AX-AD	OR2: OUT refrigerant circ.2 AX-AD
IW1: IN acqua cond circ.1 AW	IW1: IN water cooled circ.1 AW
OW1: OUT acqua cond. circ.1 AW-AF-AT	OW1: OUT water cooled circ.1 AW-AF-AT
IW2: IN acqua cond circ.2 AW	IW2: IN water cooled circ.2 AW
OW2: OUT acqua cond. circ.2 AW-AF-AT	OW2: OUT water cooled circ.2 AW-AF-AT
IWF: IN acqua AF-AT	IWF: IN water AF-AT
IP: IN alimentazione elettrica	IP: IN power supply
IH: IN umidificatore	IH: IN humidifier water
OH: OUT umidificatore	OH: OUT humidifier water
IHW: IN acqua calda	IHW: IN hot water
OHW: OUT acqua calda	OHW: OUT hot water

Version : AX - AW - AD - AT - AF
Model: 30-39-40-50
Air flow configuration: UNDER

CLIMAVENETA
Home System
SO - ITALY

Все каталоги и инструкции здесь: https://splitsystema48.ru/instrukcii-po-ekspluatacii-kondicionerov.html